Tagra | 16x16mm | Recessed | Silicone LED Diffuser | 20M

SILP1616-20M / ITM000347



Datasheet

13-11-2026

www.tagra-lighting.co.uk

support@tagra-lighting.co.uk

Tagra | 16x16mm | Recessed | Silicone LED Diffuser | 20M



Length	Material	Warranty
20m	Silicone	2 Years

SKU: SILP1616-20M

ITM: ITM000347

Key Features:

- **Product Length:** 20m
- **Diffuser Colour:** Opal
- **Dimensions (W x H):** 23 x 16mm

Mechanical Data			
Bend Direction:	Dual	**Diffuser Included:**	Yes
Diffuser Shape:	Flat	**Diffuser Transparency:**	70%
Illuminated Surface Width:	16mm	**Max. LED Strip Light Width:**	10mm
Min. Pitch for Diffusion:	120	**No. of Rows for Non-Spotting:**	1
Product Inner Depth:	15mm	**Product Weight:**	7700g
Dimensions (LxWxH):	20000 x 23 x 16mm		

Photometric Data			
Beam Angle:	120°	**Diffuser Colour:**	Opal
Diffuser Finish:	Silicone		

Environmental Data			
Body Material:	Silicone	**Impact Protection (IK):**	IK6
Ingress Protection (IP):	IP20	**Mounting Type:**	Recessed

Dimension Drawing

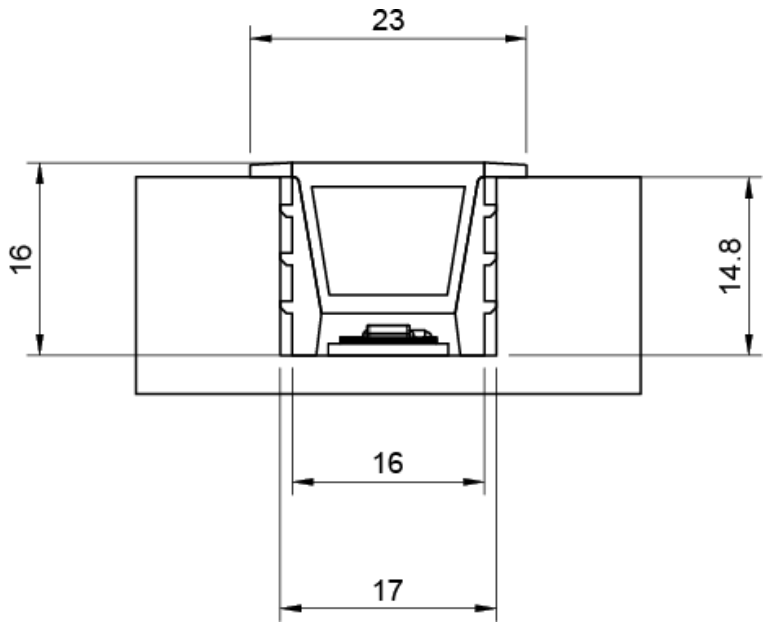

Packaging Data

Items / Sets Per Pack:	1	**Packaging Height:**	300mm
Packaging Length:	430mm	**Packaging Width:**	430mm
Packaging Weight:	7700g		

Disclaimer

Tagra Lighting have taken reasonable care to ensure that the information in this datasheet is accurate at time of publication however it should be noted that all specifications are subject to tolerance. Descriptive specifications such as colour are subjective. Tagra Lighting reserve the right to update specifications without notice. The information in the datasheet may only be relied on by customers of Tagra Lighting in accordance with applicable terms and conditions.

Tagra Lighting is a trading name of T.R Ventures Limited, a company incorporated in England with registered number 07757720. Our registered office is Unit 2, Southfield Industrial Estate, Trafford Park, M17 1SJ.

www.tagra-lighting.co.uk

support@tagra-lighting.co.uk